OBC750 LEO Flight Computer

Applications

- **LEO Missions**
- **Spacecraft Primary Computer**
- **Payload Computer**

OBC750 Flight Computer

Key Specifications

- PowerPC 750FL Processor
- 256 MiB EDAC protected SDRAM
- 2MiB Non Volatile MRAM
- HDLC / IP support
- Spacewire compatible
- Processor Monitor via CAN Bus
- COP In Circuit Debug

Operating System

- RTEMS
- Others available on request

Interfaces

- Controller Area Network
- MIL1553B
- 8 x LVDS Inputs
- 8 x LVDS Outputs
- 8 x RS485 / MLVDS Transceivers
- 4 x Optical Inputs
- 4 x Optical Driver Outputs

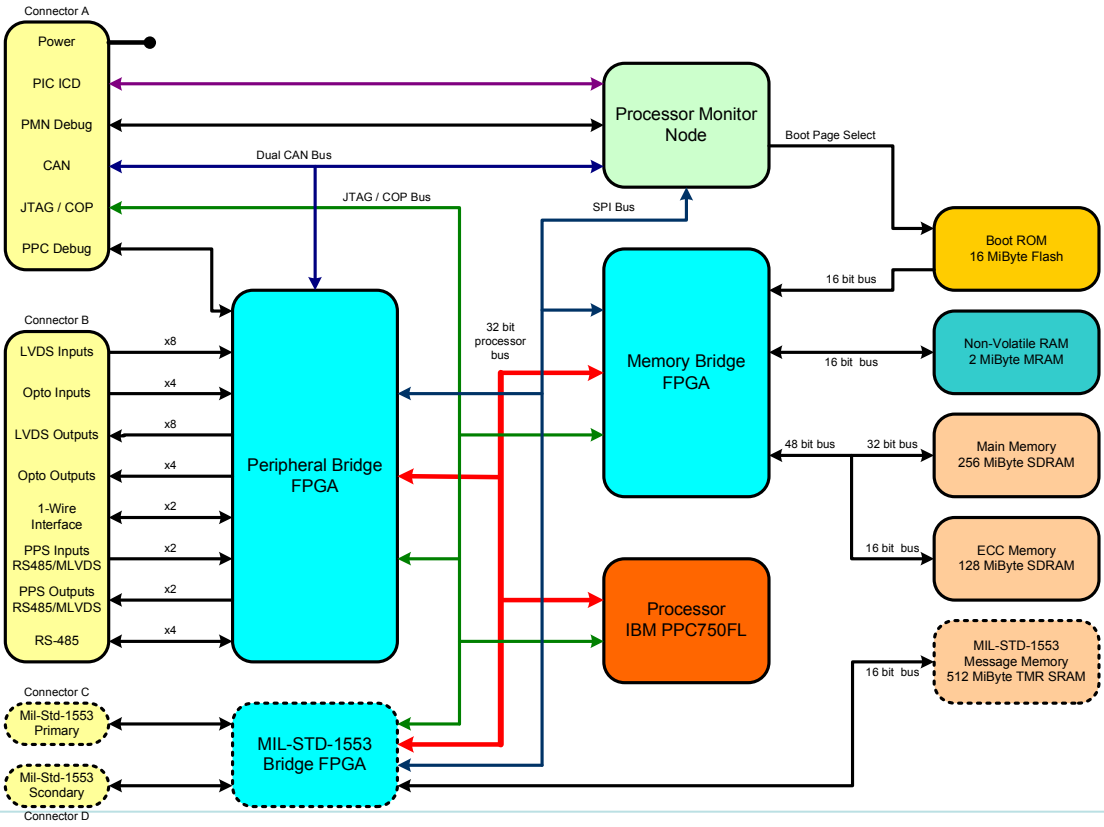

© Surrey Satellite Technology Ltd.

Tycho House, 20 Stephenson Road, Surrey Research Park, Guildford, Surrey, GU27YE, United Kingdom
Tel: +44(0)1483803803 | **Fax**:+44(0)1483803804 | **Email**: info@sstl.co.uk | **Web**:www.sstl.co.uk

09204 v1.03 - February 2010

OBC750 LEO Flight Computer

The OBC750 is a high performance low cost single-board spacecraft computer, designed for LEO applications.

The unit can be used as a single board computer, or in dual redundant configuration.

SSTL is ISO9000:2000 certified
- Manufacture and rework to
  - ECSS Q-70-80A
  - ESA PSS-01-738
  - ECSS Q-70-28A
  - Test to SSTL ISO9000:2000

Standard Delivery Service Includes
- Compliance Testing
- Vibration Test
- Thermal Cycling
- User manual
- Test Results
- Export License and Shipping

- Thermal Vacuum Testing available
- Unit can be supplied prior to environmental testing

Processor	IBM PPC750FL 1333 Dhrystone 2 MIPS 296 Whetstone MWIPS
Operating System	RTEMS Others available on request
Memory	256 MiBytes (EDAC protected) 2 MiBytes MRAM 16 MiBytes Flash (1MiByte pages)
Interfaces	MIL-STD-1563 Controller Area Network 8x LVDS Inputs 8x LVDS Outputs 4x Opto Isolated Inputs 4x Opto Driver Outputs 8x RS485 / MLVDS Tranceivers
Protocols	MIL-STD-1553 (option) Spacewire (option) CAN-SU UART HDLC Pulse-Per-Second Synchronisation Others available on request
Mass	1.5 kg
Dimensions	306 x 167 x 30mm (single board)
Power	< 10 W
Operating Temperature	-20 to +50 ºC

Surrey Satellite Technology Limited

SSTL has launched over 30 satellites gaining almost 200 years in-orbit experience. SSTL draws on its world-class expertise in both small satellite platform technology and high and medium resolution optical instruments. SSTL provides complete turn-key system solutions; spacecraft, ground station, launch, operations and image processing.

SSTL is unique in the space industry; able to design, manufacture and integrate multiple satellites in-house.

Changing the economics of space
www.sstl.co.uk

© Surrey Satellite Technology Ltd.
Tycho House, 20 Stephenson Road, Surrey Research Park, Guildford, Surrey, GU27YE, United Kingdom
Tel: +44(0)1483803803 | **Fax**:+44(0)1483803804 | **Email**: info@sstl.co.uk | **Web**:www.sstl.co.uk